GEN SERIES HMK 370 LC HD EXCAVATOR

HIDROMEK®

HEAVY DUTY TYPE

HMK 370LC HD has been designed by HİDROMEK engineers after careful evaluation of working conditions and operator demands and has been released on the market afterward as a crawler excavator that meets all expectations of users. All fabricated parts including boom, arm, bucket, undercarriage, lower and upper frames have been designed and produced as heavy duty type. HMK 370LC HD offers its operator maximum efficiency by providing trouble-free and continuous operating performance even in the toughest of working conditions. When such rigorous care at the design stage of HMK 370LC HD is combined with worldwide approved components and state-of-the-art production technologies, the outcome has been a high performance, durable, comfortable, and well-balanced product with low maintenance and operation costs.

CAB

HMK 370LC HD excavator cabin has been designed to allow the operator to work comfortably even under the hardest conditions.

Cabin entrance is large enough to enable the operator to enter the cab easily with plenty of clearance. Opening windscreen is designed to give the operator a perfect visibility. It is possible to open the windscreen by sliding it towards the roof. Rear window may be removed and kept under the operator seat. Other features enhancing operator's comfort are the ergonomic seat and front console.

The standard operator seat of the HMK 370LC HD can be adjusted in 9 different positions and is designed to enable operator to work without fatigue and comfortably with high performance for long hours. Besides, the joystick console and seat can move independently from each other which lets the operator to adjust the most suitable position for him.

The seat is equipped with seat belt as a safety precaution. The cab is supported by 6 silicon viscose mounts that dampen the effects of noise, shock and vibrations regardless of working conditions of the machine and the optional attachment on it. Also a high capacity air conditioning system is located on the cab to create the optimum working environment for the operator.

ENGINE

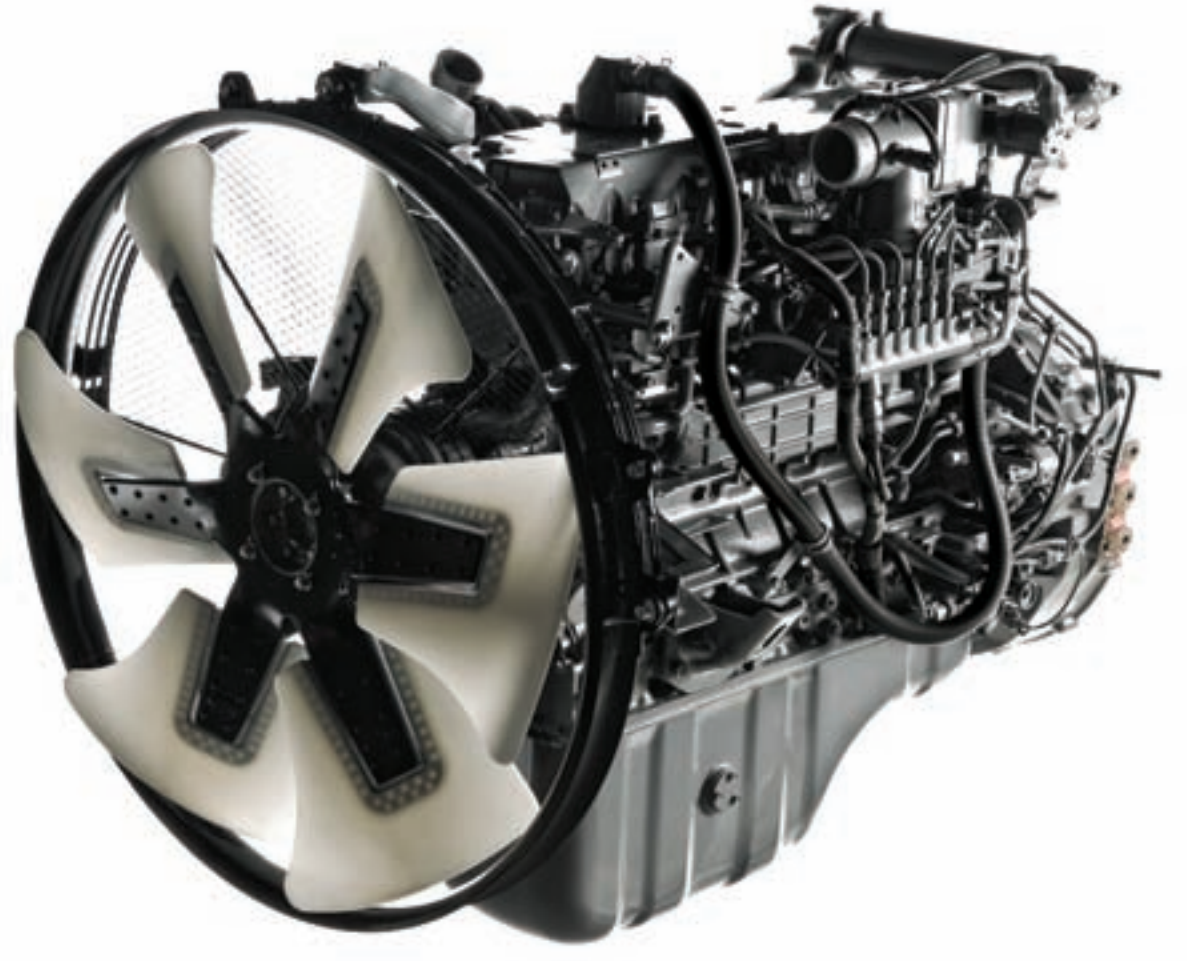

"An Extraordinary Engine"

Diesel Engine

Max. Power (SAE J1995)	: 278 HP (214 kW) @2000 rpm
Max. Torque	: 1136 Nm @1500 rpm

An extraordinary engine…

The Isuzu engine fitted in the HMK 370LC HD is specially developed for excavator applications. It is a turbo diesel engine, complies with the U.S and EU Emission Regulations, with 6 cylinders, 4 cycles, water-cooling, turbocharger and intercooler. High performance, long life and reliability of the engine under all working conditions have been proved in many different markets.

Low fuel consumption…

The direct fuel injection and intercooler features not only provide less fuel consumption but also increase the power and torque produced by the engine by providing more efficient combustion.

More than standard…

HİDROMEK always offers more than what is expected from any construction equipment. Some of the standard features offered along with HMK 370LC HD model are:

- Air pre-heating function to start-up engine easily in cold weather conditions
- Diesel fuel/water separator
- No disturbance for the environment and operator due to low exhaust gas emission and sound level.

“Reinforced Heavy Duty Type Construction”

SUB-FRAME & UNDERCARRIAGE

X’ box type sub-frame

‘X’ shape box type sub-frame has perfect resistance against bending forces and vibration stress since it homogeneously distributes the stress exposed on it.

Resistance

The lower rollers are connected to the sub-frame by pentagon shape fittings enhance the strength of the frame and lifetime of the frame, too. Modern production technologies and precise quality control systems make “zero-error” production possible.

The standard long track maximizes the balance of the machine by providing a durable platform for the machine to work on. Two roller housings in each track keep track chains in straight direction and therefore prevent corrosion of lower rollers.

The upper roller, lower rollers and front idlers are suitable for heavy-duty working conditions. They have been sealed with life-time seals which are maintenence-free.

Track pins and bushings are greased and sealed, thus reducing chain noise and extending track life.

600,700, 800, 900 mm wide track links with triple grouser are able to self-clean through their holes.

TECHNICAL SPECIFICATIONS

Opera Control System

- Perfect control
- Fuel economy
- Long component life
- Low noise level and exhaust gas emission
- Operator comfort
- Warning and protection (security) features
- Malfunction / fault indication feature
- Auxiliary functions

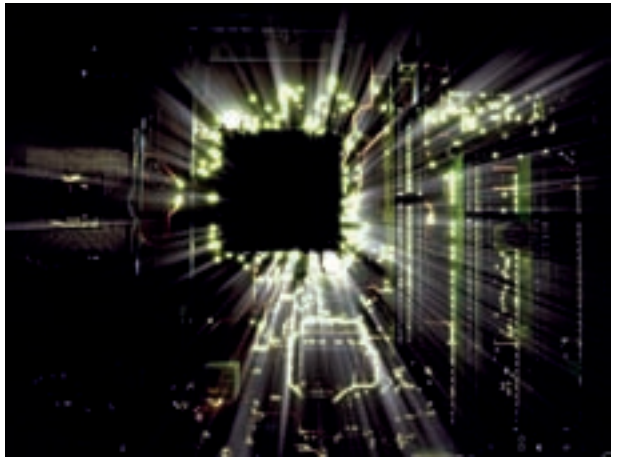

Opera Control System ,consists of 4 power modes and 3 working modes, helps operator to choose the most suitable working conditions in accordance with requirements of work through perfect matching with diesel engine and hydraulic pump.

MODE SELECTIONS

A-Power Mode Selection

POWER MODE	
F (Sensitive Mode)	This mode is used for light works requiring sensitive movements
E (Economy Mode)	This mode is for light work in which low fuel consumption is desired.
P (Power Mode)	This mode is for general digging and loading works.
HP (High Power Mode)	This mode is for heavy and high speed required

B- Working Mode Selection

WORKING MODE	
D (Digging Mode)	It is designed for normal digging operations.
B (Breaking Mode)	It is designed for breaking operations.
O (Optional attachment Mode)	It is designed to work with optional attachment.

WARNING AND PROTECTION FEATURES

Continuous Monitoring:

Opera Control System, continuously monitors the most important parameters of machine and warns the operator in case of any abnormality in three ways:

- Audio warning
- Warning lights
- Indicators

Overheating Prevention Function:

If engine water temperature and hydraulic oil temperature exceeds certain limits, electronic control system decreases the pump flow rate and engine rpm to enable the machine work continuosly.

Automatic preheating :

Automatic preheating provides reaching machine to optimum working temperatures by measuring air intake temparature , cooling water temperature and hydraulic oil temperature of diesel engine. Machine control unit removes engine rpm from idling to 1200 rpm when engine cooling water is lower than 30°C or hydraulic oil temperature is lower than 0°C and stay on this rpm until warm up . By this way early wearing of main components beginning engine in the first place is prevented. However if there is emergency and machine is required to be moved quickly , such function can be cancelled by pressing button on display panel.

Automatic Malfunction Indication:

When machine displays any malfunction, code representing such malfunction appears on display panel for warning purpose.

Malfunction Messages Memory:

Opera Control System has feature of keeping occured malfunctions in the machine in its memory.

Fuel filter Congestion Warning:

Notifies water in fuel filter to operator by view.

Manuel Mode Selection:

In case of any malfunction in control system of the machine, it is possible to switch to manual mode and continue operation by means of a button located near fuse box. Hydraulic pump flow rate is fixed and also engine rpm can be set between 900 rpm and maxinumum rpm manually.

Component Information and Main Setting Values:

Information regarding serial numbers of the components of the machine can be loaded on the control unit and may be recalled when required. It is also possible to read the required malfunction information on the display panel through the control unit during fault searching.

Program Loading and Modification:

There are computer connection ports on control unit of the machine.By means of such ports, programs of which parameters are either the same or different can be loaded on the machine.

AUXILIARY FEATURES

Automatic Powerboost:

When more power than normal working conditions is needed, electronic control system allows working at high performans through increasing system pressure.

Automatic Powershift:

If more power is needed during digging and travel , required power is obtained by mounting engine rpm and pump flow rate above setup value

Automatic Idling:

While levers are in the middle position, in case of no movements at levers, electronic control system decreases engine rpm to 1200 rpm and then decrease to idling in order to prevent redundant fuel consumption . Automotic Idling function can be activated also at any time determined by operator. When operator touches to lever , engine rpm and pump flow rate of previously selected mode is restored . This function can be canceled by operator if he desires. By this way desired power from engine can be obtained.

Condition Information:

Many parameters such as; battery voltage , engine load, pump pressures , cooling water temperature, and hydraulic oil temprature can be monitored

Maintenance Information:

There is warning system that informs operator about periodic maintenance time automotically. Also parameters related with machine maintenance can be monitored on control panel.

Operation Hours:

Detail working hours of machine , such as working hours, travel hours, attachment hours , breaking hours, are kept on the memory.

Anti-Theft System:

Anti-theft system is set up by defining private code for each operator.

Language Selection:

Selection of multi-language on the remote control panel.

Since the very first phase of its design, the new generation GEN Series Excavators has been developed so that the user could control the machine with an extraordinary ease, in an environment of total comfort, feeling himself like in his own office.

That is why, GEN - the new generation of excavators HİDROMEK, for first time in its class, has been equipped with OPERA (HİDROMEK Operator Interface).

OPERA user interface, especially developed for the GEN series HİDROMEK excavators, which integrates all the control devices on an aesthetically designed and ergonomically located console. The system consists of a high resolution (HD) coloured TFT screen , an Electronic Control Unit and the Opera Control Unit.

With OPERA it is extraordinary easy to manage functions such as:

- Engine RPM control
- Navigate in the menus
- Choose the most appropriate working mode
- Control the lights and wipers
- Manage radio/MP3
- Start-Stop the engine to ensure maximum fuel economy.
- Control of the cameras – rear view and on the arm (optional)
- Monitoring the machine conditions, such as hydraulic pressure, engine coolant and hydraulic oil temperature, turbo boost pressure, fuel pressure, atmosphere pressure and others.
- Error Codes
- Times of work - as a time of excavating, work with attachments (breakers etc), travel, etc.
- Time to the next maintenance among others.

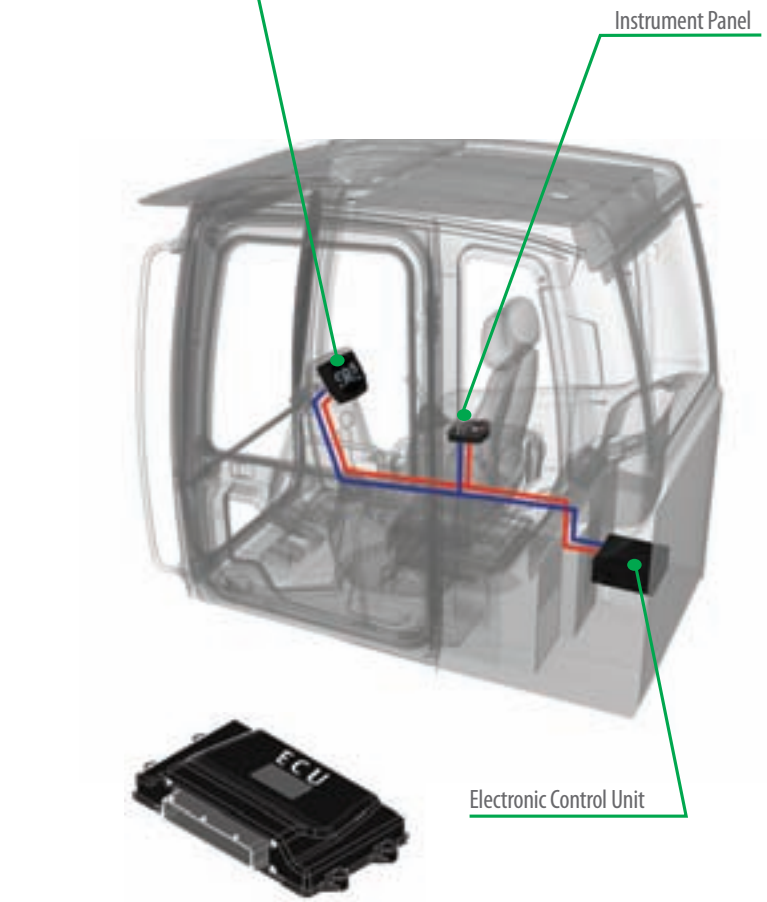

HYDRAULIC SYSTEM

Features:

- Easy to control
- High efficiency
- Generation of required flow rate when needed (negative control)
- Continuous control of power generation depending on increasing load
- Maximum performance under all sorts of working conditions due to functional power modes
- Priority allowance in attachment movements
- Regeneration of flow rate in main control valve

Main Hydraulic Pump

Machine performance and pump life have been maximized by using two axial pistons and variable displacement hydraulic pumps from Kawasaki, a worldwide leading hydraulic pump manufacturer. It is possible to generate the necessary flow rate when required thanks to the negative control feature. By matching the power generated from diesel engine and the power required by the hydraulic pump under increase load, engine stalls is prevented. The best matching of the engine and pump flow rate is achieved with the power mode modulation depending on working conditions. By this way;

- High efficiency
- High quality
- Long and trouble-free operating life is achieved.

Main Control Valve

The main control valve ensures sensitive and vibration free operation in each combined movement. The operator is able to focus only on his work since the priority at the arm, boom and swing movements are provided automatically by the control valve, thus maximizing efficiency. The re-generative system prevents cavitations during boom, arm and bucket movements and increases both the life of the hydraulic system and speed of the machine.

Holdin valves on the boom and arm are supplied as standard equipments in order to balance the interior leakage between spool and body so the potential leakage problem at the attachments is avoided.
Thanks to the two-staged main relief valve, it is possible to increase the power whenever is required.

Inside the main control valve, there is straight travel valves. Due to the featured structure of the main valve block, it is possible to join the oil produced by both pumps within the valve group. There is no need for an external pipe or hose for such operation.

An additional valve section is available for breaker or other optional attachments.

Swing Hydromotor and Gearbox

An axial piston type hydromotor with high torque is used together with a heavy duty type gearbox. The hydromotor features shock absorbing valves specially designed to provide smooth and vibration free swing movement. The braking of the swing movement is provided by an oil type spring-driven park brake system.

Other features

The hydraulic accumulator which enables lowering of the attachments in case of emergency (i.e. diesel engine or main hydraulic pump failure) is located in the pilot line.
The advanced hydraulic system provides easy maintenence and thus decreases spare part costs.
Hydraulic cylinders are designed with a cushioning system to provide a vibration and shock free operation.
The entire hydraulic system is fitted with high capacity filters so ensure absolute cleanliness.
Different types of breakers may be fitted by selecting desired flow rate and pressure on the control unit.

TECHNICAL SPECIFICATIONS

ENGINE

Emission Class	: Stage III-A (Tier 3), (UNECE R96)	: Stage III-B (Interim Tier 4)
Brand, Model	: ISUZU-AH-6HK1X	: ISUZU-AL-6HK1X
Type	: Water cooled diesel engine , 4 cycles, 6 cylinders, line type direct injection, turbocharger and intercooler	: Water cooled diesel engine , 4 cycles, 6 cylinders, line type direct injection, turbocharger and intercooler
Power	: 287 HP (214 kW) @2000 rpm / SAE J1995 (Gross)	: 281 HP (210 kW) @1900 rpm / SAE J1995 (Gross)
	: 268 HP (200 kW) @2000 rpm / SAE J1349 (Net)	: 265 HP (198 kW) @1900 rpm / SAE J1349 (Net)
Maximum Torque	: 1136 Nm @1500 rpm (Gross)	: 1080 Nm @1500 rpm (Gross)
	: 1070 Nm @1500 rpm (Net)	: 1043 Nm @1500 rpm (Net)
Displacement	: 7790 cc	: 7790 cc
Bore x Stroke	: 115 mm x 125 mm	: 115 mm x 125 mm
This new engine complies with the Emission Regulations U.S EPA Tier III and EU Stage III-A		This new engine complies with the Emission Regulations U.S EPA Interim Tier 4 and EU Stage III-B

HYDRAULIC SYSTEM

Main Pump	
Type	: 2 axial piston type pumps with double variable displacement and inclined plate
Max. Flow Rate	: 2 x 290 lt/min
Pilot Pump	: Gear type, 28 L/m (15 cc/rev)
Working Pressures	
Cylinders	: 330 kgf/cm^2
Power Boost	: 350 kgf/cm^2
Travel	: 350 kgf/cm^2
Swing	: 265 kgf/cm^2
Pilot	: 40 kgf/cm^2
Cylinders	
Boom (370LC / NLC)	: 2 × ø 150 × ø 105 × 1.510 mm
Arm (370LC / NLC)	: 1 × ø 170 × ø 120 × 1.830 mm
Bucket (370LC / NLC)	: 1 × ø 150 × ø 110 × 1.280 mm
Bucket (370LC LR)	: 1 × ø 125 × ø 85 × 1.060 mm

SUB-FRAME

Construction	: "X" type lower frame, pentagon box type side frame
Shoe	: Triple grouser
No. of Shoes	: 2 x 50 units
No. of Lower Rollers	: 2 x 9 units
No. of Upper Rollers	: 2 x 2 units
Full Trackguard	: Complete
Track Tensioning	: Hydraulic type with spring cushioning

LUBRICATION

A central lubrication system is available in order to lubricate difficult-to-reach points such as boom and arm.

SWING SYSTEM

Motor	: Axial Piston motor with fixed displacement and inclined plate
Reduction	: 2 stage planetary gear type
Swing Brake	: Hydraulic, disc type with warning
Swing Speed	: 8,64 rpm

CAB

- Improved operator's all round visibility
- Increased cabin internal space
- Use of six viscomount cabin mountings that dampen the vibrations
- High capacity A/C
- Cooled storage room
- Glass holder, book and object storage pockets
- Pool type floor mat
- Improved operator's comfort through versatile adjustable seat
- Ergonomically redesigned cabin through relocated switch board, and re-styled travel pedals and levers

FILLING CAPACITIES

Fuel Tank	: 555 L	Engine Oil	: 36 L
Hydraulic Tank	: 260 L	Swing Reducer	: 7,2 L
Hydraulic System	: 480 L	Travel Reducer	: 2x10 L
Engine Cooling Sys	: 39 L		

ELECTRICAL SYSTEM

Voltage	: 24 V
Battery	: 2 x 12 V / 150 Ah
Alternator	: 24 V / 50 A
Starting Motor	: 24 V / 5,0 kW

TRAVEL AND BRAKES

Travel	: Fully hydrostatic
Travel Motor	: Axial piston motor with 2 speed stages and inclined plate
Reduction	: Planetary gear system with 2 stages
Travel Speed	
High Speed	: 4,9 km/h
Low Speed	: 2,9 km/h
Max Traction	: (370LC HD) 30.540 kgf
	: (370NLC) 30.420 kgf
	: (370LC LR) 30.115 kgf
Gradeability	: 35° (70%)
Parking Brake	: Hydraulic, disc type with automatic warning
Ground pressure (600mm Shoe) 370 LCHD	: 0,72 kgf/cm^2
Ground pressure (600mm Shoe) 370 NLC	: 0,73 kgf/cm^2
Ground pressure (800mm Shoe) 370 LCLR	: 0,58 kgf/cm^2

OPERA CONTROL SYSTEM

• Easy-to-use control panel and menu	• Anti-theft system with personal code
• Improved fuel economy and productivity	• Auto-Idle and automatic deceleration system
• Maximum efficiency by selection of power and work modes	• Automatic powershift to improve performance
• Automatic powerboost switch-on and switch-off	• Selection of multi-language on control panel
• Overheat prevention and protection system without interrupting the work	• Real time monitoring of operational parameters such as pressure, temperature, engine load
• Automatic electric cut-off	• Automatic preheater
• Maintenance information and warning system	• Possibility to register 26 different operating hours
• Error mode registry and warning system	• Rear-view, arm-view camera (Optional)
• HİDROMEK Smartlink (Optional)	

WEIGHT

Standard machine operating weight	
370LC HD (600mm Shoe)	: 39.250 kg
370 NLC (600mm Shoe)	: 40.050 kg
370LC LR (800mm Shoe)	: 42.100 kg

Operational weight, complying with the ISO 6016 standards, includes full fuel tank, hydraulic system and other liquids, 75kg operator weight and standard equipped machine weight. Optional equipments are not included.

ACCESSORIES

STANDARD BUCKET

HEAVY DUTY TYPE

Width		1.750 mm	
Capacity (SAE)		*2,2 m³	
Weight		1.950 kg	
Number of teeth		5	
Boom		*6,1 m	6,5 m
ARM	2,2 m	B	C
	*2,6 m	C	C
	3,2 m	-	D
	4,0 m	-	-

* Standard

OPTIONAL BUCKET SELECTION DIAGRAM

1.150 mm		1.265 mm		1.400 mm		1.525 mm		1.850 mm	
1,2 m³		1,4 m³		1,6 m³		1,8 m³		2,0 m³	
1.420 kg		1.500 kg		1.630 kg		1.700 kg		1.650 kg	
4		4		5		5		5	
*6,1 m	6,5 m	*6,1 m	6,5 m	*6,1 m	6,5 m	*6,1 m	6,5 m	*6,1 m	6,5 m
A	A	A	A	A	A	A	A	A	B
A	A	A	A	A	A	A	B	B	C
-	A	-	A	-	B	-	C	-	D
-	A	-	B	-	C	-	D	-	D

Note: Single radius buckets and rock type buckets are available

BREAKOUT FORCES

	Bucket capacity	*2,60 m	2,20 m	3,20 m	4,0 m
SAE	Bucket digging force (power boost)	20.000 (21.200) kgf	19.900 (21.100) kgf	20.100 (21.300) kgf	20.100 (21.300) kgf
	Arm breakout force (power boost)	19.400 (20.600) kgf	23.000 (24.400) kgf	16.000 (17.000) kgf	13.800 (14.600) kgf
ISO	Bucket digging force (power boost)	23.500 (25.000) kgf	23.400 (24.800) kgf	23.700 (25.100) kgf	23.700 (25.100) kgf
	Arm breakout force (power boost)	20.300 (21.600) kgf	24.300 (25.700) kgf	16.700 (17.700) kgf	14.300 (15.200) kgf

* Standard

STANDARD BUCKET

HEAVY DUTY TYPE

Width		1.200 mm	1.600 mm
Capacity		1,0 m³	0,80 m³
Weight		790 kg	910 kg
Number of teeth		5	-
ARM	6,0 m	A	A

* Tilt angle 2 x 35º

DITCH CLEANING BUCKETS

BREAKOUT FORCES

SAE	Arm length	6,0 m
	Bucket digging force	9.800 kgf
	Arm breakout force	7.500 kgf
ISO	Bucket digging force	11.000 kgf
	Arm breakout force	7.700 kgf

A- Material density less than 2.000 kg/m³
B- Material density less than 1.800 kg/m³
C- Material density less than 1.500 kg/m³
D- Material density less than 1.200 kg/m³

WARNING
- Optional attachment and accessory standards offered with machines may differ according to countries.
- Please consult your authorized dealer to provide attachments and accessories.

LIFTING CAPACITIES

HMK 370LC HD Boom: 6,10 m, Arm: 2,6 m, Bucket: 2,0 m³ (SAE), Shoe: 600 mm														⇧ : Front	⇨ : Side	
A, m	Load Unit	1,5		3,0		4,5		6,0		7,5		9,0		Maximum Reach		
B, m		⇧	⇨	⇧	⇨	⇧	⇨	⇧	⇨	⇧	⇨	⇧	⇨	⇧	⇨	A,m
7,5	kg													*6750	*6750	7,02
6,0	kg									*7150	6850			*6650	6000	7,97
4,5	kg					*11050	*11050	*8800	*8800	*7600	6600			*6850	5100	8,55
3,0	kg					*14050	*14050	*10200	9100	*8300	6250			*7400	4600	8,83
1,5	kg					*16300	13250	*11450	8500	*8950	5900			*7550	4400	8,85
0 (ground)	kg			*12150	*12150	*17050	12650	*12100	8050	*9300	5650			*7850	4500	8,61
- 1,5	kg	*14150	*14150	*19900	*19900	*16550	12550	*12050	7900	*9150	5600			*8200	4950	8,08
- 3,0	kg	*21400	*21400	*20750	*20750	*14850	12750	*10950	8000					*8500	6050	7,20
- 4,5	kg			*15550	*15550	*11500	*11550							*8500	*8500	5,79
- 6,0	kg															

HMK 370LC LR Boom: 10,0 m, Arm: 6,0 m, Bucked: 1,0 m³ (SAE), Shoe: 800 mm														⇧ : Front	⇨ : Side	
A, m	Load Unit	3,0		6,0		9,0		12,0		15,0		Maximum Reach				
B, m		⇧	⇨	⇧	⇨	⇧	⇨	⇧	⇨	⇧	⇨	⇧	⇨	⇧	⇨	R,m
15,0	kg															
12,0	kg											*2250	*2250	11,94
9,0	kg							*3350	*3350			*2150	*2150	13,92
6,0	kg					*4550	*4550	*3600	*3600	*2300	2200	*2200	*2200	15,04
3,0	kg			*8950	*8950	*5500	5450	*4050	3300	*3200	2050	*2400	1900	15,51
0 (ground)	kg			*8350	8100	*6250	4600	*4350	2900	*3300	1900	*2850	1750	15,39
- 3,0	kg	*3850	*3850	*8850	7650	*6450	4200	*4450	2650			*3300	1900	14,65
- 6,0	kg	*6600	*6600	*8950	7800	*5900	4150	*4000	2650			*3350	2300	13,20
- 9,0	kg			*6350	*6350	*4250	*4250					*3150	*3150	10,75
- 12,0	kg													

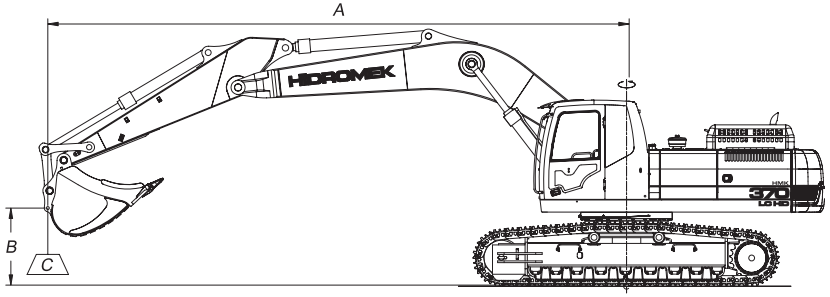

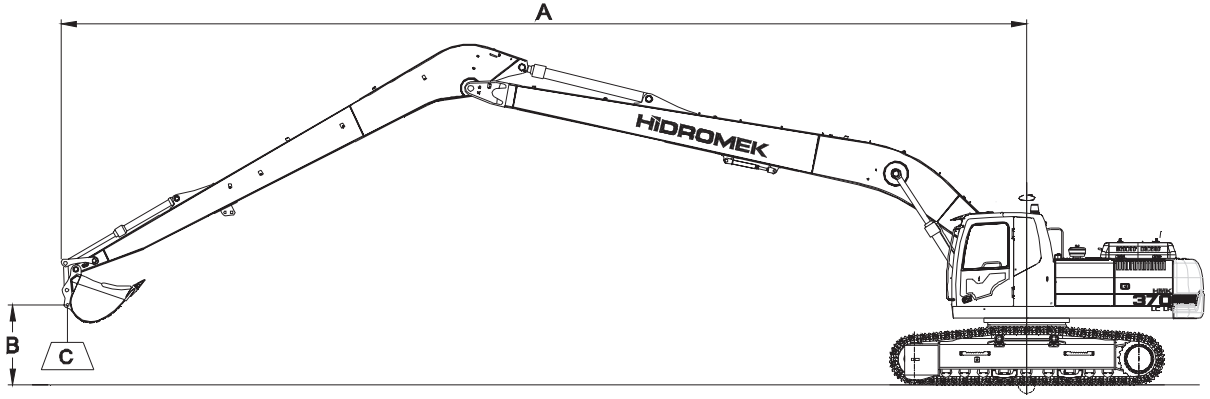

A Load Radius
B Load Point Height
C Lifting Capacity

WARNING

HİDROMEK has the right to modify the specifications and design of the model indicated on this brochure without prior notice.

Notes

1. Lifting capacities are according to SAE J1097 and ISO 10567.
2. Load point is load linkage point on the bucket.
3. Lifting capacity cannot exceed 75% of over tipping capacity or 87% of full hydraulic capacity.
4. Values marked with (*) are limited by hydraulic capacity.

DIMENSIONS

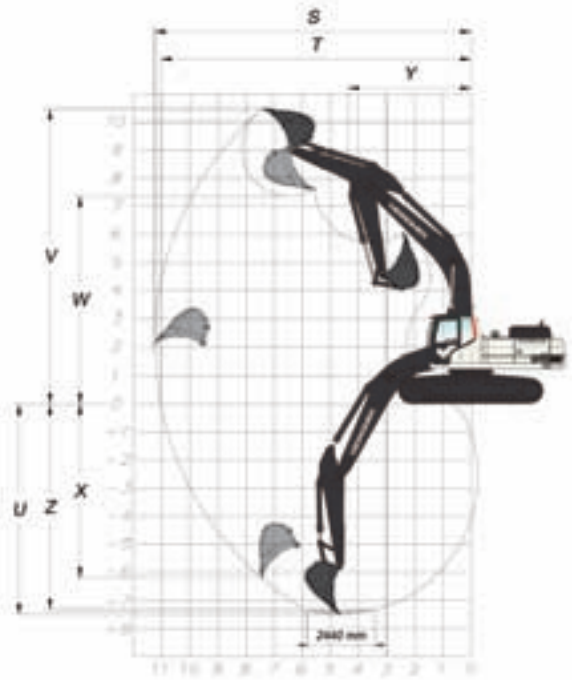

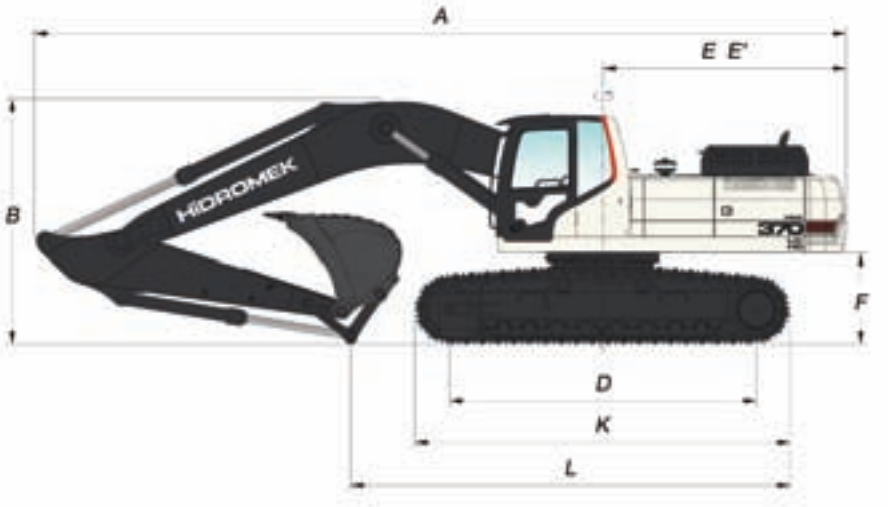

GENERAL DIMENSIONS

Boom Dimension		*6.100 mm			6.500 mm		
Arm Dimension		2.200 mm	*2.600 mm	3.200 mm	2.600 mm	3.200 mm	4.000 mm
A	- Overall Length	10.980 mm	10.940 mm	10.830 mm	11.330 mm	11.250 mm	11.290 mm
B	- Overall Height	3.800 mm	3.680 mm	3.360 mm	3.640 mm	3.420 mm	3.710 mm
C	- Overall Width (LC)	*3.300 / 3.400 / 3.500 / 3.600 mm					
C	- Overall Width (NLC)	*2.990 / 3.090 / 3.190 mm					
D	- Idler Distance	4.240 mm					
E	- Counterweight Distance	3.400 mm					
E´	- Turning Radius	3.420 mm					
F	- Upper Structure Ground Clearance	1.250 mm					
G	- Crawler Height	1.090 mm					
H	- Minimum Ground Clearance	510 mm					
I	- Track Gauge (LC)	2.700 mm					
I	- Track Gauge (NLC)	2.390 mm					
J	- Shoe Width	*600 / 700 / 800 / 900 mm					
K	- Overall Length of Crawler	5.190 mm					
L	- Length Over Ground	7.460 mm	6.660 mm	5.620 mm	7.110 mm	6.090 mm	5.560 mm
M	- Overall Height (to Top of Cab)	3.190 mm					
N	- Upper Structure Width	2.990 mm					

* Standard

WORKING DIMENSIONS

Boom Dimension		*6.100 mm			6.500 mm		
Arm Dimension		2.200 mm	*2.600 mm	3.200 mm	2.600 mm	3.200 mm	4.000 mm
S	- Maximum Digging Reach	10.040 mm	10.380 mm	10.900 mm	10.790 mm	11.310 mm	12.070 mm
T	- Maximum Digging Reach at Ground Level	9.810 mm	10.150 mm	10.690 mm	10.570 mm	11.100 mm	11.880 mm
U	- Maximum Digging Depth	6.160 mm	6.560 mm	7.160 mm	6.970 mm	7.570 mm	8.370 mm
V	- Maximum Digging Height	9.960 mm	10.020 mm	10.200 mm	10.250 mm	10.420 mm	10.820 mm
W	- Maximum Dumping Clearance	6.750 mm	6.870 mm	7.070 mm	7.110 mm	7.300 mm	7.680 mm
W´	- Minimum Dumping Clearance	3.570 mm	3.070 mm	2.480 mm	3.330 mm	2.750 mm	1.950 mm
X	- Maximum Vertical Digging Depth	4.930 mm	5.050 mm	5.540 mm	5.360 mm	5.850 mm	6.670 mm
Y	- Minimum Swing Radius	4.330 mm	4.110 mm	4.110 mm	4.460 mm	4.450 mm	4.610 mm
Z	- Digging Depth for 2440 mm Flat Bottom	5.960 mm	6.380 mm	7.000 mm	6.780 mm	7.400 mm	8.230 mm

* Standard

DIMENSIONS 370LC LR

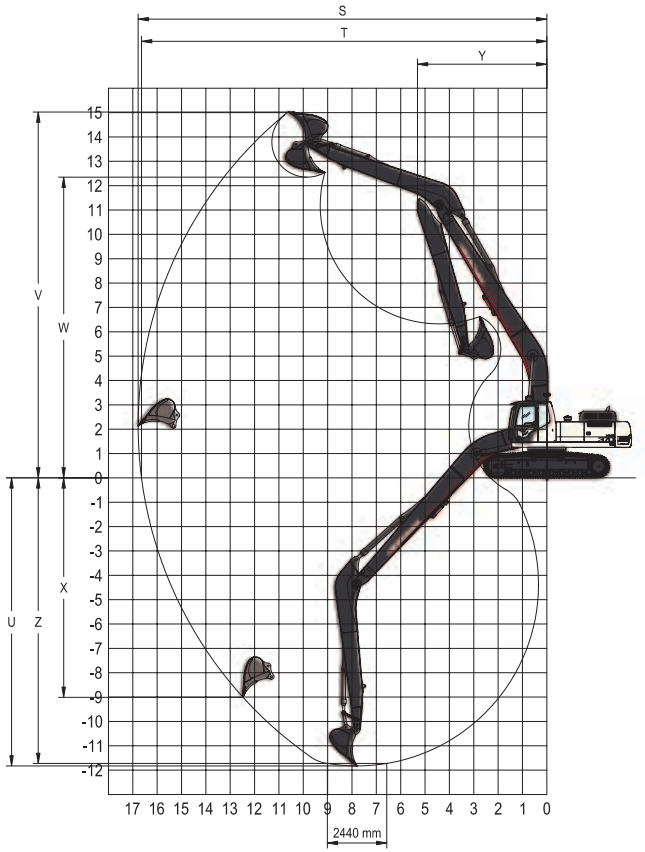

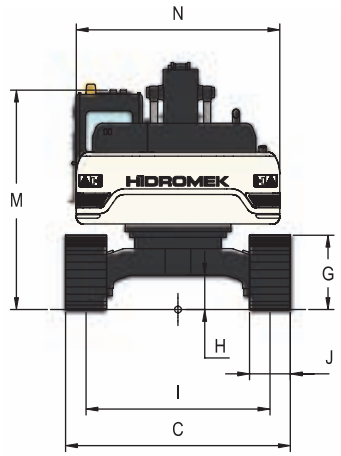

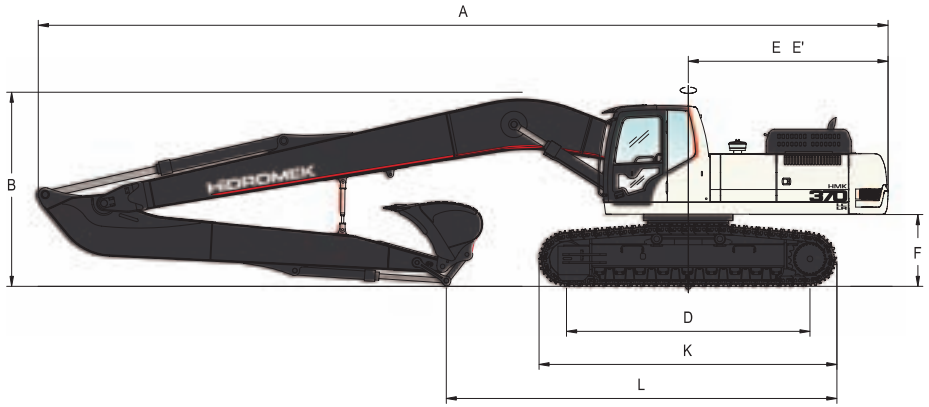

GENERAL DIMENSIONS

Boom Dimension		10.000 mm
Arm Dimension		6.000 mm
A	- Overall Length	14.870 mm
B	- Overall Height	3.380 mm
C	- Overall Width	3.300 / 3.400 / *3.500 / 3.600 mm
D	- Idler Distance	4.240 mm
E	- Counterweight Distance	3.520 mm
E´	- Turning Radius	3.540 mm
F	- Upper Structure Ground Clearance	1.250 mm
G	- Crawler Height	1.090 mm
H	- Minimum Ground Clearance	510 mm
I	- Track Gauge	2.700 mm
J	- Shoe Width	600 / 700 / *800 / 900 mm
K	- Overall Length of Crawler	5.190 mm
L	- Length Over Ground	6.810 mm
M	- Overall Height (to Top of Cab)	3.190 mm
N	- Upper Structure Width	2.990 mm

* Standart

WORKING DIMENSIONS

Boom Dimension		10.000 mm
Arm Dimension		6.000 mm
S	- Maximum Digging Reach	16.840 mm
T	- Maximum Digging Reach at Ground Level	16.700 mm
U	- Maximum Digging Depth	11.870 mm
V	- Maximum Digging Height	15.190 mm
W	- Maximum Dumping Clearance	12.290 mm
W´	- Minimum Dumping Clearance	3.790 mm
X	- Maximum Vertical Digging Depth	11.280 mm
Y	- Minimum Swing Radius	5.510 mm
Z	- Digging Depth for 2440 mm Flat Bottom	11.770 mm

DETAILS

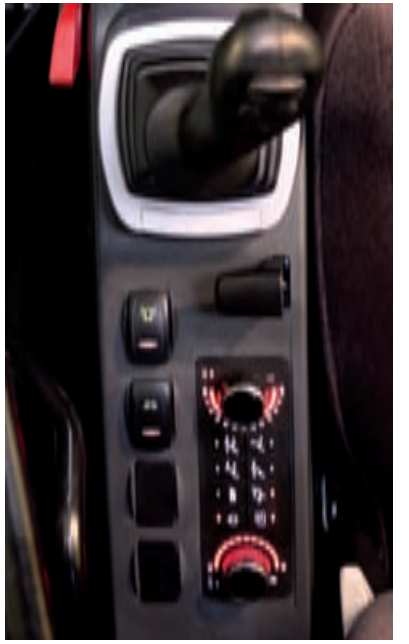

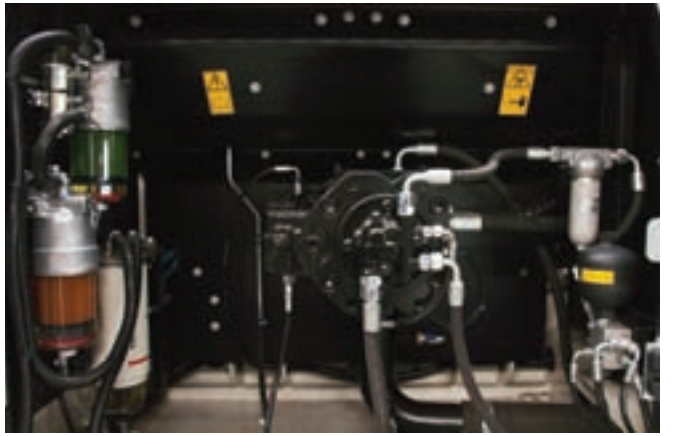

EQUIPMENT LIST

Special Equipment List

- 6,5 m boom
- 2,2 m, 3,2 m, 4,0 m arm
- Various size buckets
- Automatic lubrication system
- Rotator line
- Boom safety valve
- Arm safety valve
- Overload warning system
- Beacon lamp
- 700, 800, 900 mm track
- Hydraulic breaker
- Hydraulic Quick Coupler
- Ripper
- Windscreen protective netting
- Headlights
- HİDROMEK Smart Link
- Rotational moving hydraulic shear installation
- Air suspension seat with heated

Standard Equipment List

- Radio/MP3
- Air conditioner
- Cab heating system
- Cab conforming to FOPS tests
- Computer connection port
- Oil and dust seal ring in chain pins
- Long life lubricating in rollers and direction wheel
- Fuel transfer pump
- Front air filter
- Double air filter
- Automatic idling
- Engine pre-heating facility
- Overheating, low engine pressure, air filter clogging indicators
- Battery charge warning system
- Hydraulic breaker line
- Camera
- Tool box
- Working ligth on counterweigth
- Additional working lamp at the front
- Additional working lamp at the rear
- Air suspension seat

ENG - FEBRUARY 2019 / 040219

HIDROMEK®

HIDROMEK HEAD OFFICE
Address : Ahi Evran OSB Mahallesi Osmanlı Caddesi No:1
06935, Sincan - Ankara / TURKEY
Phone : +90 312 267 12 60 • **Fax:** +90 312 267 12 39
E-mail : ihracat@hidromek.com.tr

HIDROMEK RUS
Address : 72, Zhivopisnaya str., Building A, village
Oktyabrskiy, Krasnodar, 350032, RUSSIA
Phone : +7 861 290 3007
E-mail : info@hidromek.ru

HIDROMEK THAILAND
Hidromek Construction Equipment Ltd.
Address : No: 700/669 Moo 1, T. Phanthong
A. Phanthong,Chonburi 20160, THAILAND
Phone : +66 38 447 349 • **Fax:** +66 38 447 355

HIDROMEK WEST
Address : C/De La Maquina 14, Poligono Industrial El Regás,
08850 - Gavá BARCELONA/ SPAIN
Phone : +34 93 638 84 65 • **Fax** : +34 93 638 07 14
E-mail : info@hidromek.es

HIDROMEK JAPAN
Address : 5-10, Hashimoto 6-chome, Midori-Ku,
Sagamihara, Kanagawa, 252-0143 JAPAN
Phone : +81 42 703 0261 • **Fax:** +81 42 703 0262

www.hidromek.com

Your Local Distributor:

WARNING
HIDROMEK has the right to modify the specifications and design of the model indicated on this brochure without prior notice.